NO. AE	CH.-NO. AE.-M.	DESCRIPTION OF CHANGE AENDERUNG	DATE DATUM DD.MM.YY	DRAWN BEARB.	CHECK. GEPR.	APP. GESEH.
01	K38916	OLD FORMAT DRAWING MADE OBSOLETE.	20.04.18	NASH.R	FLETCHER.N	FELL
02	K38916	EXPLODED ISOMETRIC VIEW AND REFERENCING SPARE PARTS LIST ADDED. STANDARD SPECIFICATION TABLE ADDED. COV RATING WAS 2.5 BAR. 45° CHAMFER ADDED TO ROTOR BASE. DRAWING UPDATED TO NEW FORMAT.	20.04.18	NASH.R	FLETCHER.N	FELL

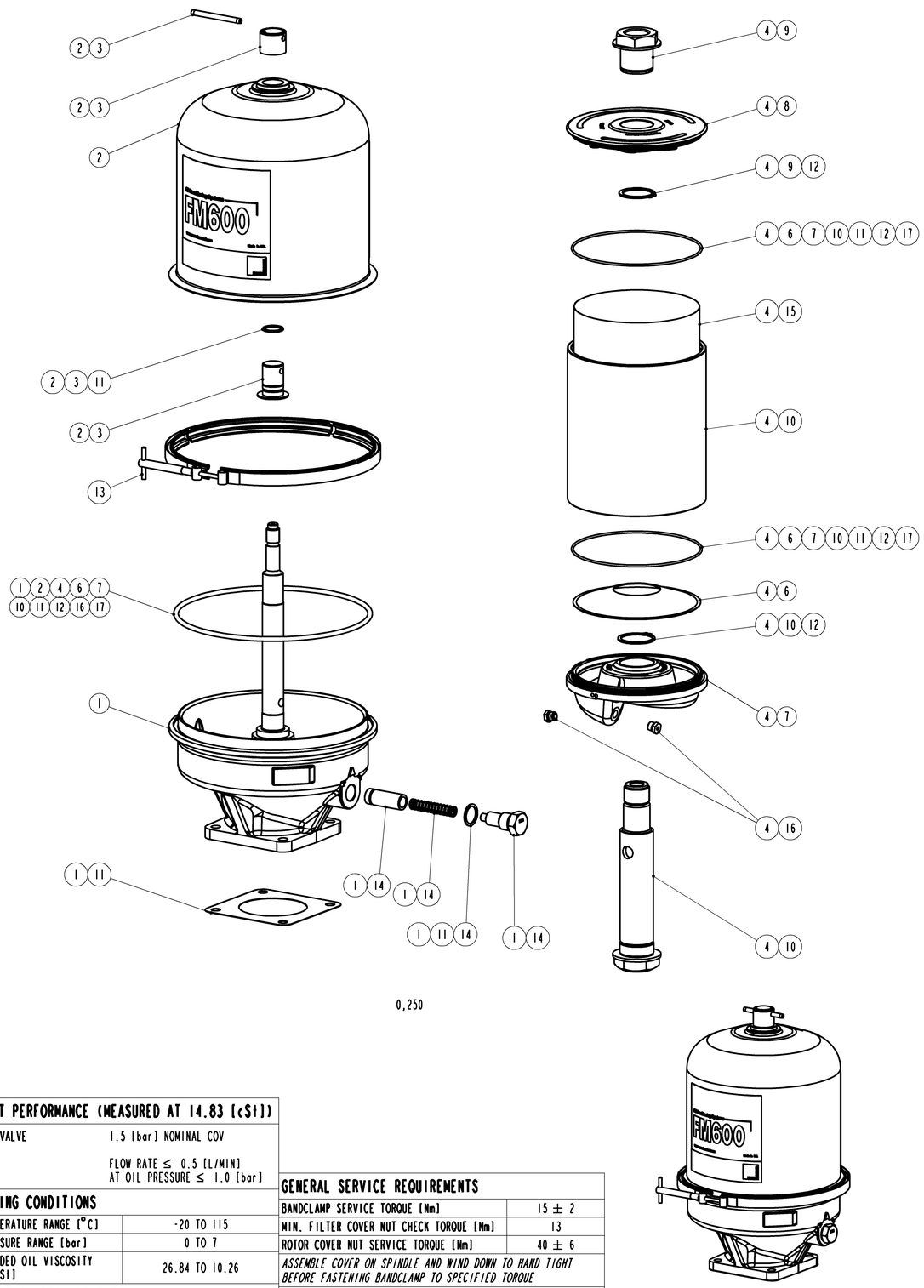

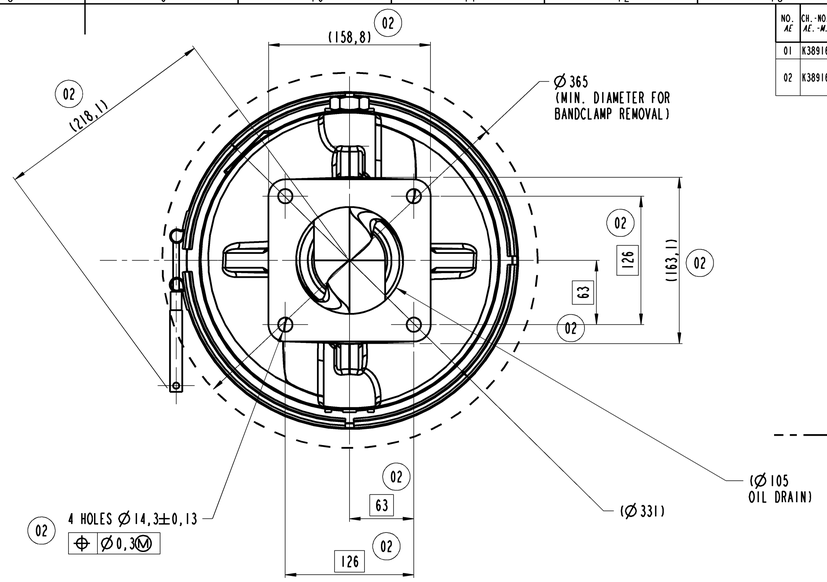

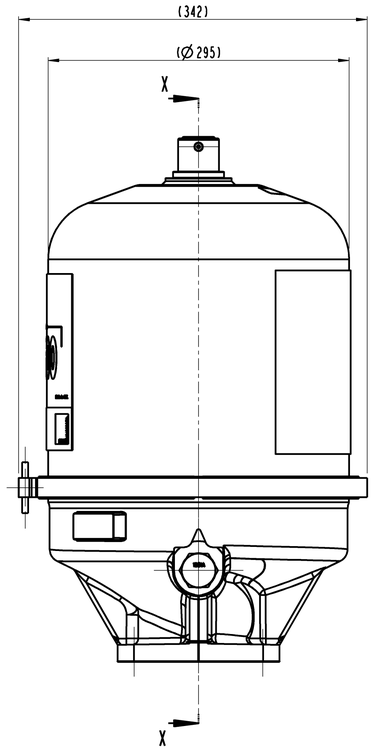

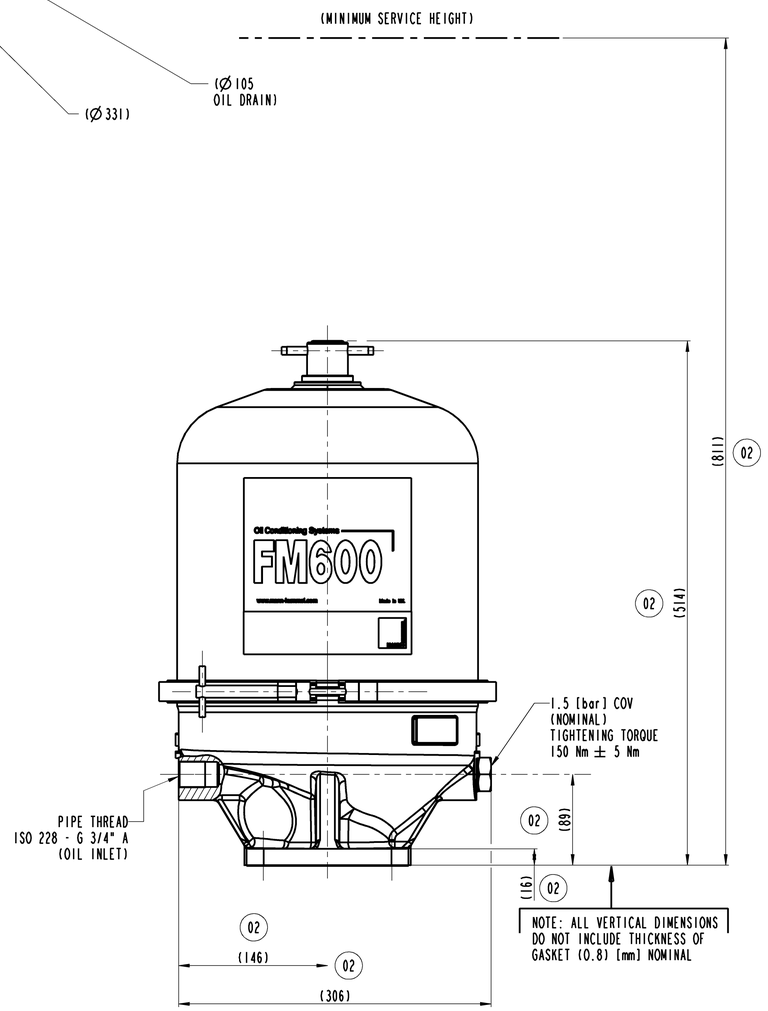

PRODUCT PERFORMANCE (MEASURED AT 14.83 [cSt])

CUT OFF VALVE	1.5 [bar] NOMINAL COV
	FLOW RATE ≤ 0.5 [L/MIN] AT OIL PRESSURE ≤ 1.0 [bar]

OPERATING CONDITIONS

OIL TEMPERATURE RANGE [°C]	-20 TO 115
OIL PRESSURE RANGE [bar]	0 TO 7
RECOMMENDED OIL VISCOSITY RANGE [cSt]	26.84 TO 10.26

APPLICATION REQUIREMENTS

MIN. DRAIN SIZE [mm] (INCL. FITTINGS)	Ø76
MIN. OIL FEED PIPE [mm]	Ø19
ASSEMBLY TORQUE-MOUNTING INTERFACE [Nm]	70 ± 10
ASSEMBLY TORQUE-INLET [Nm]	XX ± XX <TBC>
MOUNTING INTERFACE FLATNESS	▱ 0,1
MOUNTING INTERFACE SURFACE FINISH	Ra 6.3 / Ra 3.2

GENERAL SERVICE REQUIREMENTS

BANDCLAMP SERVICE TORQUE [Nm]	15 ± 2
MIN. FILTER COVER NUT CHECK TORQUE [Nm]	13
ROTOR COVER NUT SERVICE TORQUE [Nm]	40 ± 6

ASSEMBLE COVER ON SPINDLE AND WIND DOWN TO HAND TIGHT BEFORE FASTENING BANDCLAMP TO SPECIFIED TORQUE

MISCELLANEOUS/NOTES

1- ALL O-RINGS TO BE FKM MATERIAL
2- ALL CASTED COMPONENTS TO BE NEUTRAL BRANDED
3- ROTOR FITTED WITH CAT BRANDED PAPER INSERT
4- NO COMPONENTS CONTAINS ASBESTOS
5- FILTER COVER PAINTED IN WHITE COLOUR
6- PRODUCT TO BE PACKED IN A ZERUST BAG AND SUPPLIED IN A CARDBOARD BOX WITH ADHESIVE LABEL ATTACHED
7- ALL PRESSURES MEASURED AS GAUGE PRESSURE

SPARE PARTS LIST / *ERSATZTEILLISTE*

POS. POS.	NAME BENENNUNG	PART-NO. BESTELL-Nr.	CUSTOMER-NO. FREMD-NR.
17	ROTOR TUBE KIT	68 997 54 001	-
16	NOZZLE KIT	68 997 60 801	-
15	PAPER INSERT KIT (PACK OF 25 PIECES)	68 997 54 301	-
14	COV KIT	68 997 67 601	-
13	BANDCLAMP KIT	68 997 51 101	-
12	CIRCLIP KIT	68 997 51 301	-
11	SEALS KIT	68 997 51 201	-

SPARE PARTS LIST / *ERSATZTEILLISTE*

POS. POS.	NAME BENENNUNG	PART-NO. BESTELL-Nr.	CUSTOMER-NO. FREMD-NR.
10	BEARING TUBE KIT	68 997 53 901	-
9	ROTOR COVERNUT KIT	68 997 76 301	-
8	ROTOR COVER KIT	68 997 76 001	-
7	ROTOR BASE KIT	68 997 75 201	-
6	SEPARATION CONE KIT	68 997 54 101	-
5	ROTOR SERVICE TOOL (NOT SHOWN)	68 906 91 201	-
4	ROTOR ASSEMBLY KIT	68 997 50 701	-
3	FILTER COVERNUT KIT	68 997 51 401	-
2	FILTER COVER ASSEMBLY KIT	68 997 73 901	-
1	FILTER BODY ASSEMBLY KIT	68 997 75 601	-

CUSTOMER NOTICES / *KUNDENVERMERKE*
...
...
X - X
0,333

TOLERANCES OF FORM AND POSITION
~~FORM UND LAGETOLERANZEN~~
~~ACC. TO I.A. ISO 1101:2004-12~~
~~SURFACES / OBERFLÄCHEN~~
~~ACC. TO I.A. ISO 1302:2002-02~~
~~WORKPIECE EDGES~~
~~WERKSTÜCKKANTEN~~
~~ACC. TO I.A. ISO 13715:2000-06~~

ISO 128/2001-4

SCALE *MASS-STAB* 0,600

WEIGHT (CALCULATED) G *GEWICHT (GERECHNET)* ...

DIM. WITHOUT TOLERANCES: *MASSE OHNE TOLERANZANGABEN:*

		DEPT. / *ABT.*	DATE/*DATUM* DD.MM.YYYY	NAME *NAME*
LENGTHS *LAENGEN*	± X	SC-IN-IF-EN2		
RADII *RADIEN*	± X	DRAWN / *BEARB.*	25.03.2016	NASH.R
CHAMFERS *FASEN*		CHECK. / *GEPR.*	02.05.2018	FLETCHER.N
ANGLE *WINKEL*	± X	APP. / *GESEH.*	02.05.2018	FELL

SALES DESIGN. / *VERKAUFSBEZ.*
FM600-18 CENTRIFUGE

CUSTOMER DRAWING
ANGEBOTSZEICHNUNG

REFER TO PROTECTION NOTICE ISO 16016/2000-09

THE REPRODUCTION, DISTRIBUTION AND UTILIZATION OF THIS DOCUMENT AS WELL AS THE COMMUNICATION OF ITS CONTENTS TO OTHERS WITHOUT EXPRESS AUTHORIZATION IS PROHIBITED. OFFENDERS WILL BE HELD LIABLE FOR THE PAYMENT OF DAMAGES. ALL RIGHTS RESERVED IN THE EVENT OF THE GRANT OF A PATENT, UTILITY MODEL OR DESIGN.

NAME / *BENENNUNG*
CENTRIFUGE

PROJ.-NO. / *PROJ.-NR.* EP-MHT1079

MANN+HUMMEL (UK) LTD.
UNITS 11-15, LEACH ROAD
CHARD BUSINESS PARK, CHARD
SOMERSET, TA20 1FA.

DRAWING-NO. / *ZEICHNUNGS-NR.* **68 991 16 001**

SHEET / *BLATT* 1 OF / *VON* 1

NO. *AE* 02

CAD-SYSTEM / *CAD-SYSTEM*	PLANT CODE / *WERKCODE*	SUBSTITUTE FOR / *ERSATZ FUER*	SIMILAR / *AEHNLICH*
PTC Creo 2.0	G1		A1